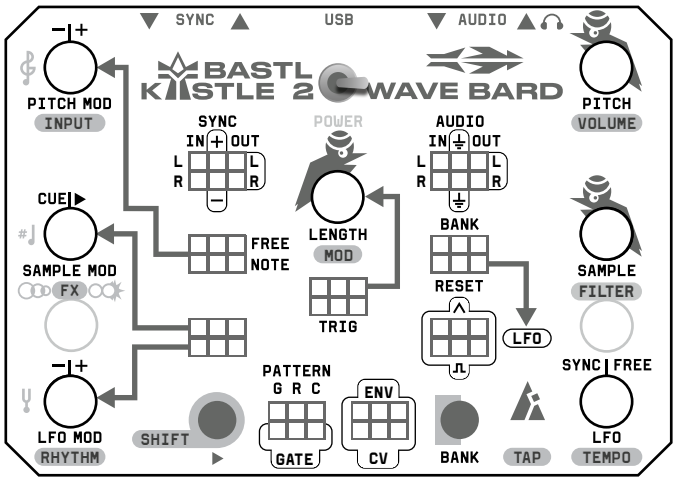
SYNC
USB
AUDIO
BASTL KASTLE 2
WAVE BARD
PITCH MOD
INPUT
PITCH
VOLUME
SYNC
IN OUT
L
R
POWER
AUDIO
IN OUT
L
R
CUE
SAMPLE MOD
FX
FREE
NOTE
LENGTH
MOD
BANK
RESET
SAMPLE
FILTER
TRIG
LFO
SYNC FREE
PATTERN
G R C
ENV
LFO MOD
RHYTHM
SHIFT
GATE
CV
BANK
TAP
LFO
TEMPO

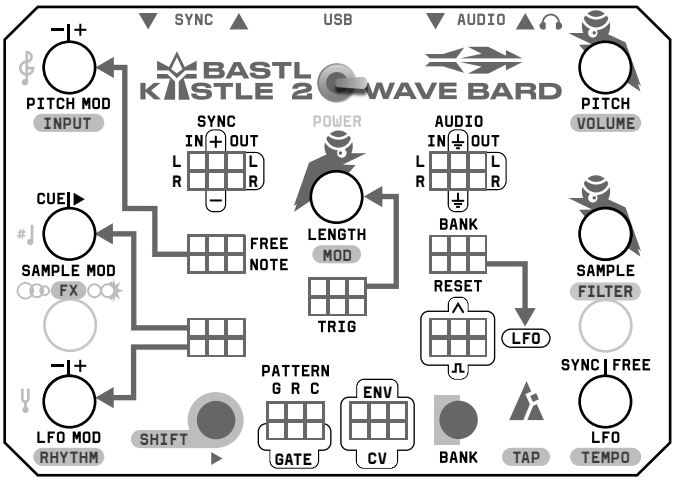
SYNC
USB
AUDIO
BASTL KASTLE 2
WAVE BARD
PITCH MOD
INPUT
PITCH
VOLUME
SYNC
IN OUT
L
R
POWER
AUDIO
IN OUT
L
R
CUE
SAMPLE MOD
FX
FREE
NOTE
LENGTH
MOD
BANK
RESET
SAMPLE
FILTER
TRIG
LFO
SYNC FREE
PATTERN
G R C
ENV
LFO MOD
RHYTHM
SHIFT
GATE
CV
BANK
TAP
LFO
TEMPO

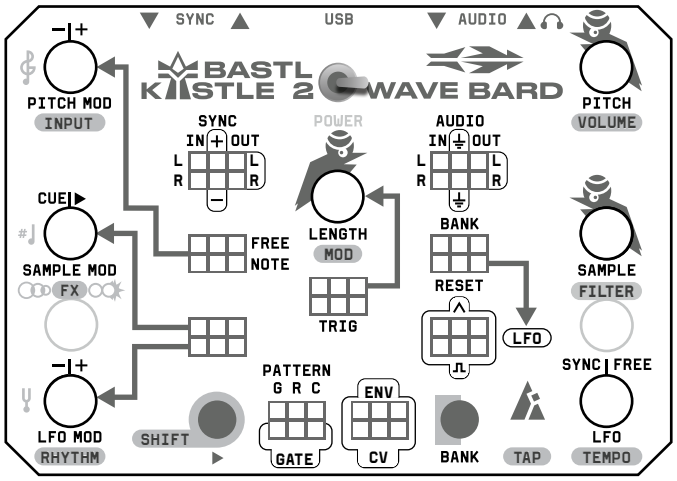
SYNC
USB
AUDIO
BASTL KASTLE 2
WAVE BARD
PITCH MOD
INPUT
PITCH
VOLUME
SYNC
IN OUT
L
R
POWER
AUDIO
IN OUT
L
R
CUE
SAMPLE MOD
FX
FREE
NOTE
LENGTH
MOD
BANK
RESET
SAMPLE
FILTER
TRIG
LFO
SYNC FREE
PATTERN
G R C
ENV
LFO MOD
RHYTHM
SHIFT
GATE
CV
BANK
TAP
LFO
TEMPO

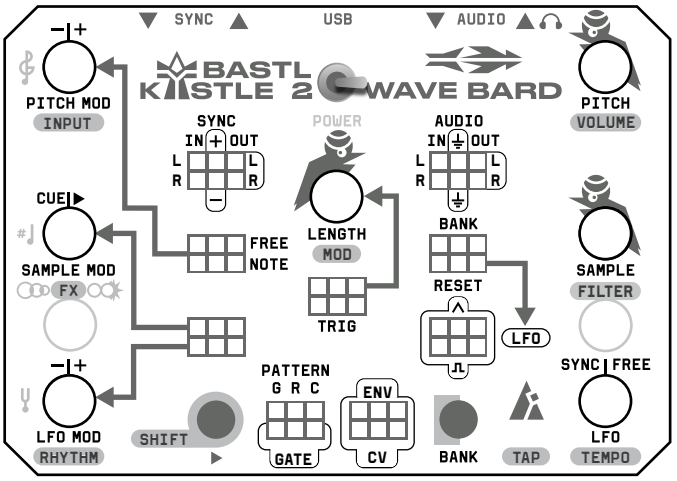
SYNC
USB
AUDIO
BASTL KASTLE 2
WAVE BARD
PITCH MOD
INPUT
PITCH
VOLUME
SYNC
IN OUT
L
R
POWER
AUDIO
IN OUT
L
R
CUE
SAMPLE MOD
FX
FREE
NOTE
LENGTH
MOD
BANK
RESET
SAMPLE
FILTER
TRIG
LFO
SYNC FREE
PATTERN
G R C
ENV
LFO MOD
RHYTHM
SHIFT
GATE
CV
BANK
TAP
LFO
TEMPO

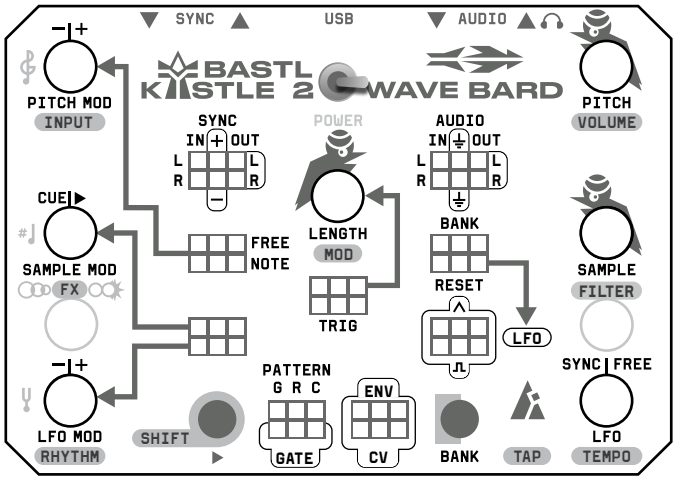
SYNC
USB
AUDIO
BASTL KASTLE 2
WAVE BARD
PITCH MOD
INPUT
PITCH
VOLUME
SYNC
IN OUT
L
R
POWER
AUDIO
IN OUT
L
R
CUE
SAMPLE MOD
FX
FREE
NOTE
LENGTH
MOD
BANK
RESET
SAMPLE
FILTER
TRIG
LFO
SYNC FREE
PATTERN
G R C
ENV
LFO MOD
RHYTHM
SHIFT
GATE
CV
BANK
TAP
LFO
TEMPO

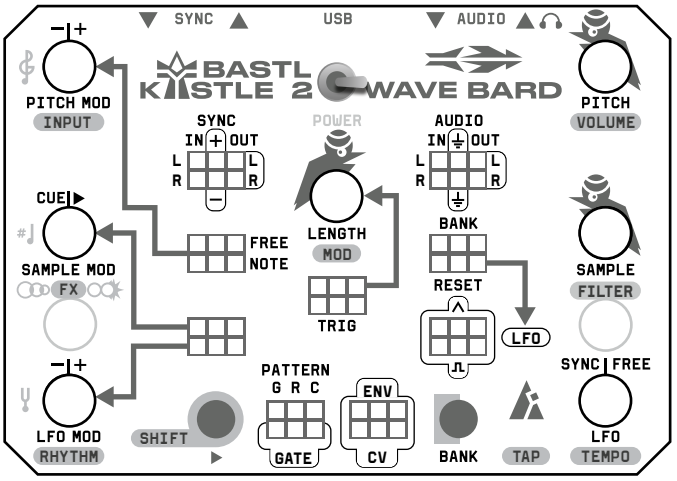
SYNC
USB
AUDIO
BASTL KASTLE 2
WAVE BARD
PITCH MOD
INPUT
PITCH
VOLUME
SYNC
IN OUT
L
R
POWER
AUDIO
IN OUT
L
R
CUE
SAMPLE MOD
FX
FREE
NOTE
LENGTH
MOD
BANK
RESET
SAMPLE
FILTER
TRIG
LFO
SYNC FREE
PATTERN
G R C
ENV
LFO MOD
RHYTHM
SHIFT
GATE
CV
BANK
TAP
LFO
TEMPO

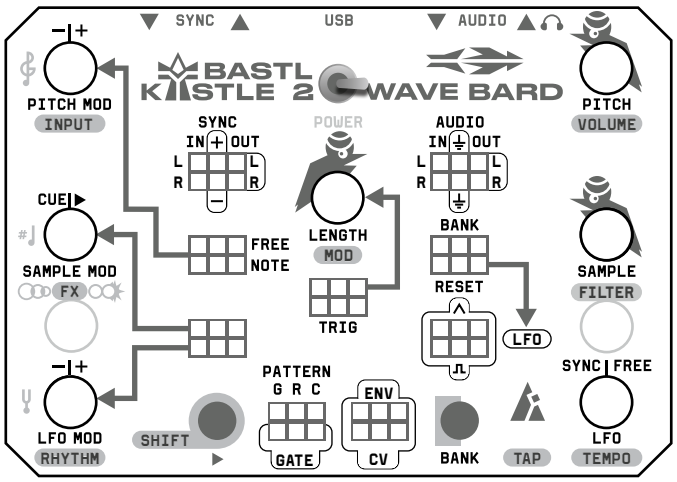
SYNC
USB
AUDIO
BASTL KASTLE 2
WAVE BARD
PITCH MOD
INPUT
PITCH
VOLUME
SYNC
IN OUT
L
R
POWER
AUDIO
IN OUT
L
R
CUE
SAMPLE MOD
FX
FREE
NOTE
LENGTH
MOD
BANK
RESET
SAMPLE
FILTER
TRIG
LFO
SYNC FREE
PATTERN
G R C
ENV
LFO MOD
RHYTHM
SHIFT
GATE
CV
BANK
TAP
LFO
TEMPO

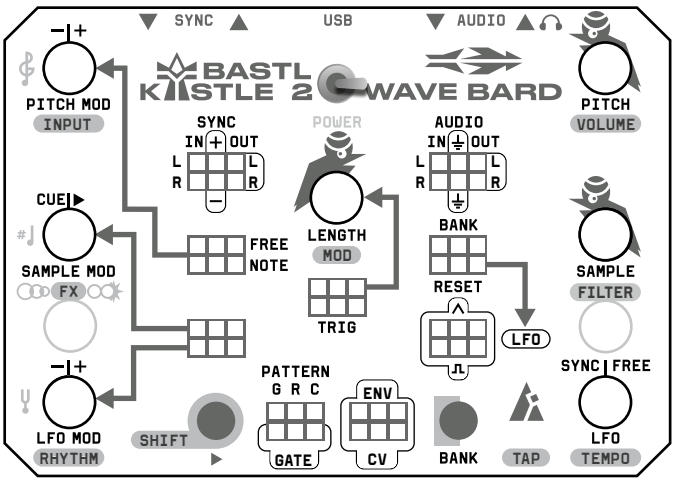
SYNC
USB
AUDIO
BASTL KASTLE 2
WAVE BARD
PITCH MOD
INPUT
PITCH
VOLUME
SYNC
IN OUT
L
R
POWER
AUDIO
IN OUT
L
R
CUE
SAMPLE MOD
FX
FREE
NOTE
LENGTH
MOD
BANK
RESET
SAMPLE
FILTER
TRIG
LFO
SYNC FREE
PATTERN
G R C
ENV
LFO MOD
RHYTHM
SHIFT
GATE
CV
BANK
TAP
LFO
TEMPO